Plathina 78 AS

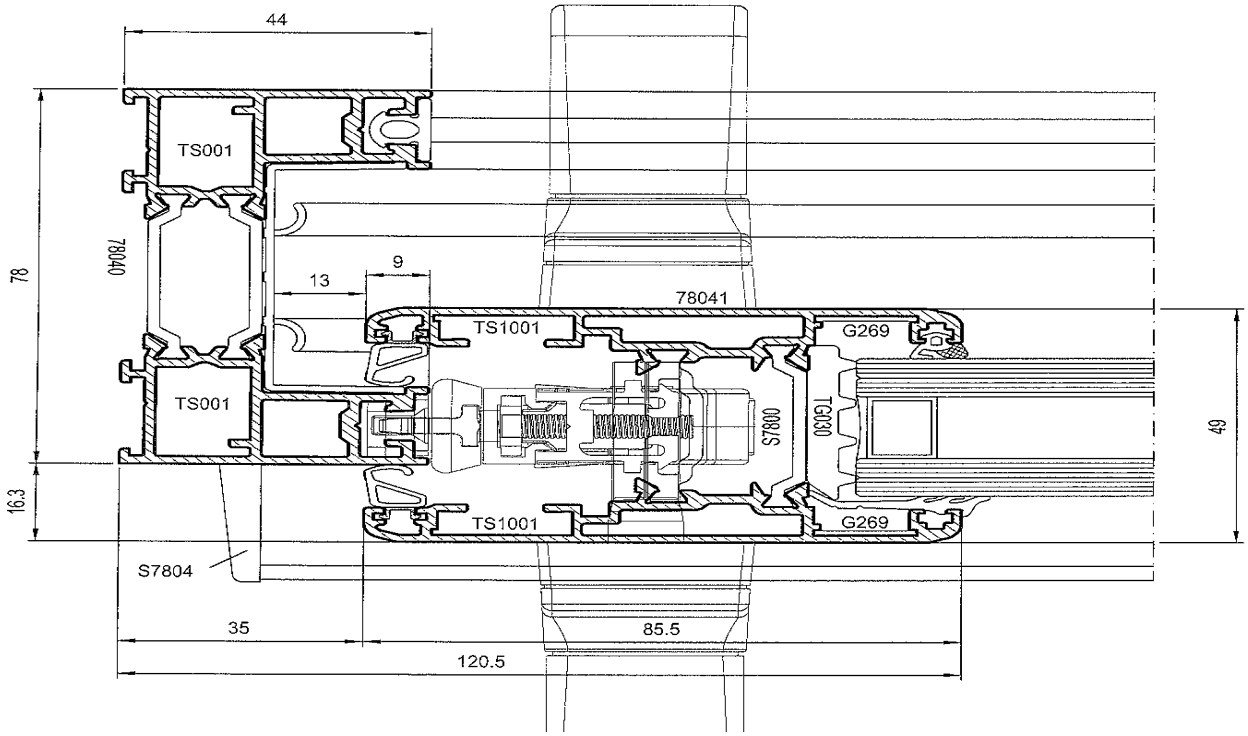

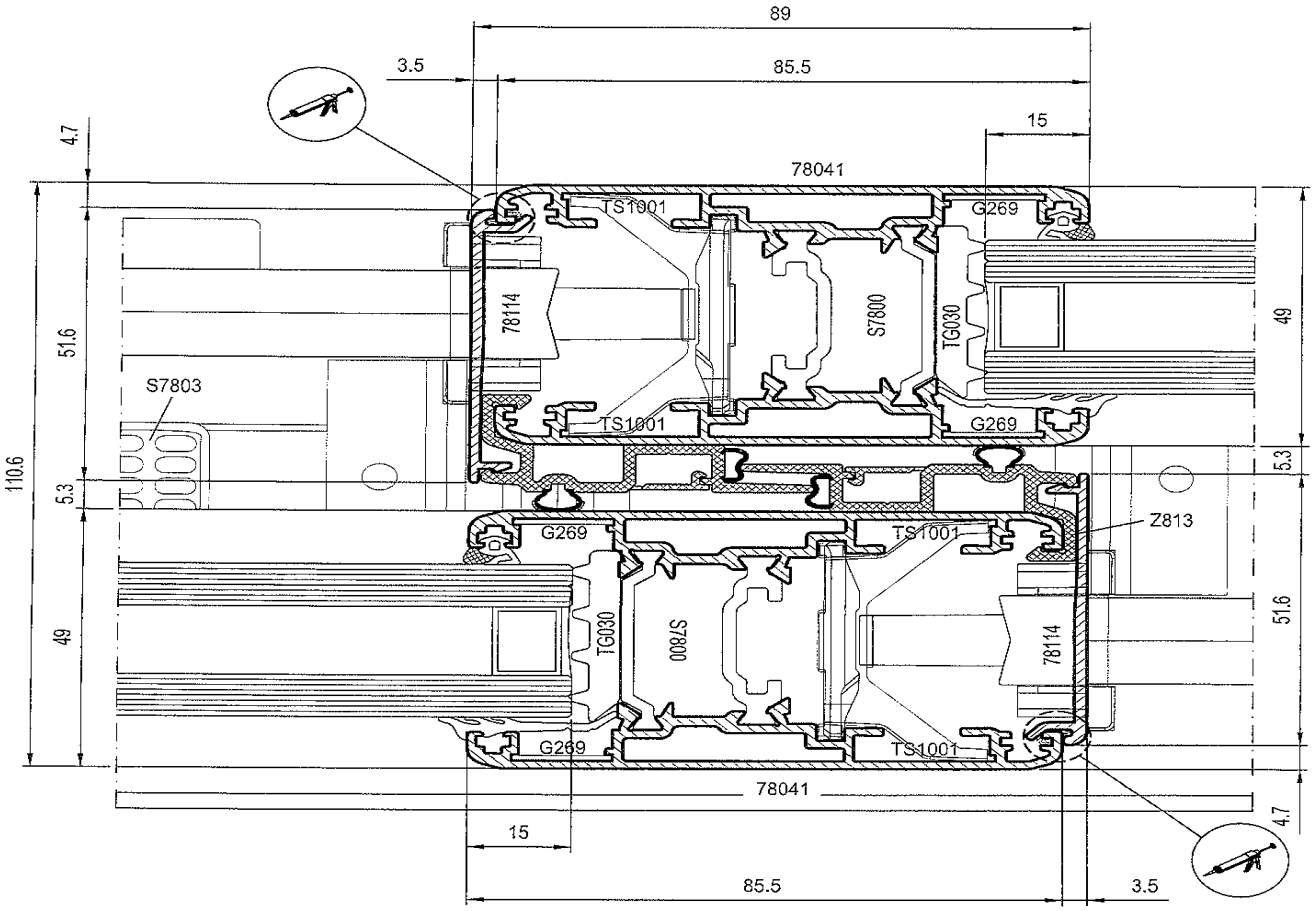

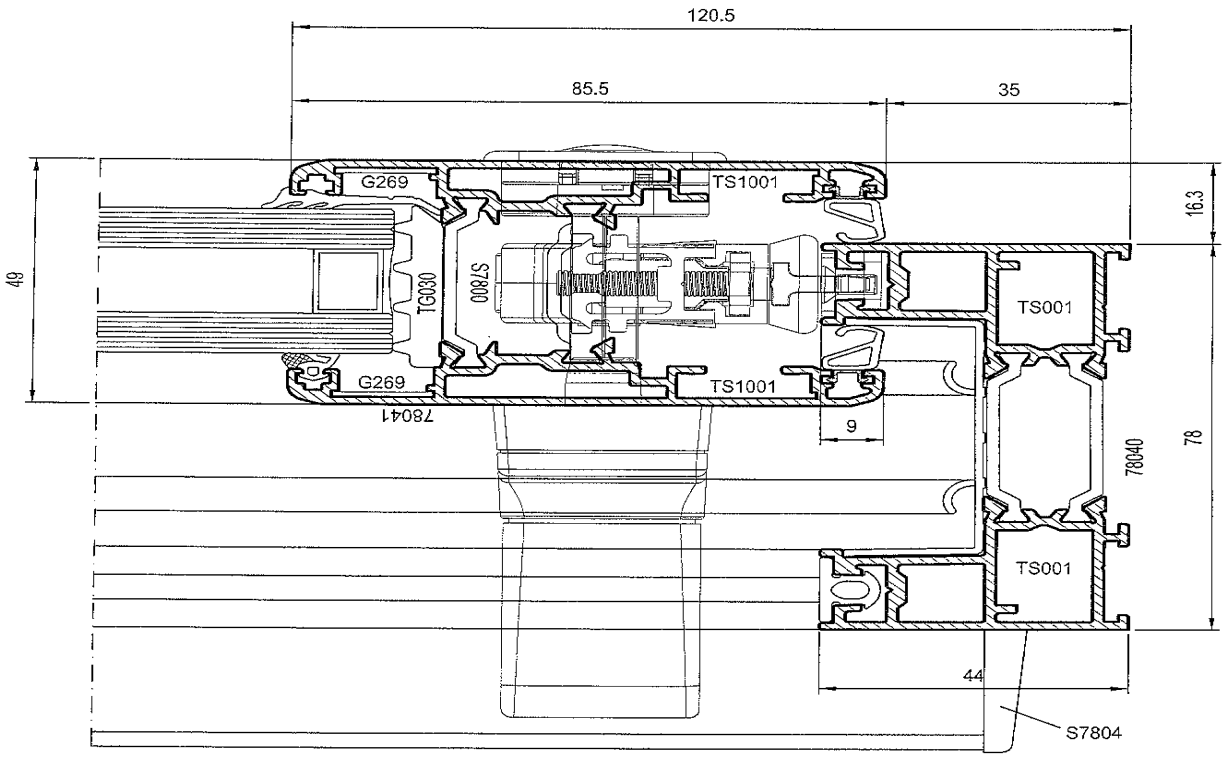
120.5
85.5
35
G269
TS1001
16.3
49
S7800
TG030
TS001
G269
TS1001
78041
9
78040
78
TS001
44
S7804

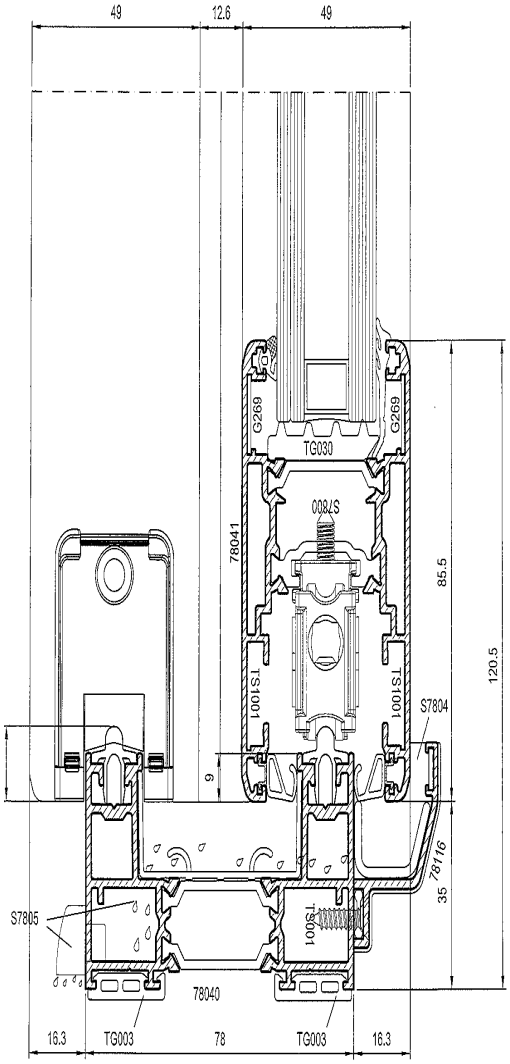
49
12.6
49
G269
G269
TG030
S7800
78041
85.5
120.5
TS1001
TS1001
S7804
9
78116
35
S7805
TS001
78040
16.3
TG003
78
TG003
16.3

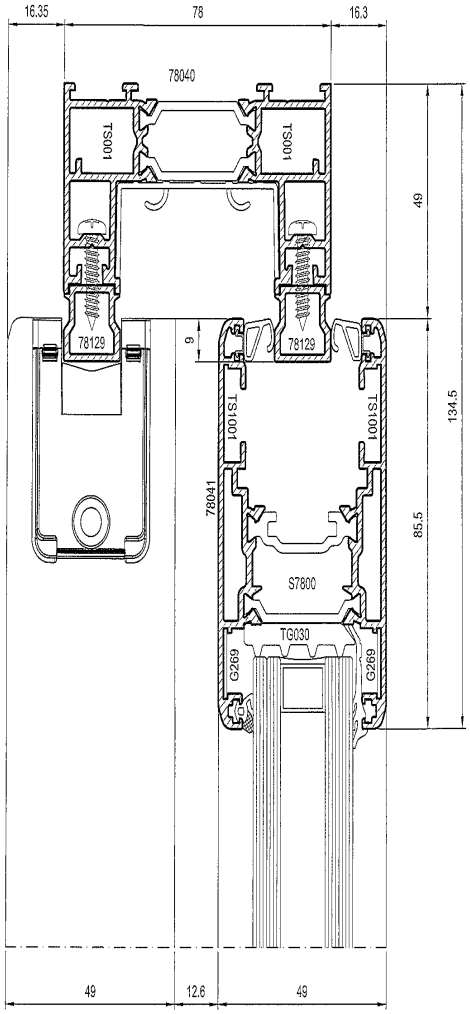
16.35
78
16.3
78040
TS001
TS001
49
78129
9
78129
TS1001
TS1001
134.5
78041
85.5
S7800
TG030
G269
G269
49
12.6
49